LONESTAR PRESTRESS MFG. INC.
9316 Reid Lake Houston, TX 77064
TEL. (713) 896-0994, FAX (713) 896-0411 www.lonestarprestress.com

DWG.: CATALOG

CAT.: 967839

DATE:

PROJECT:

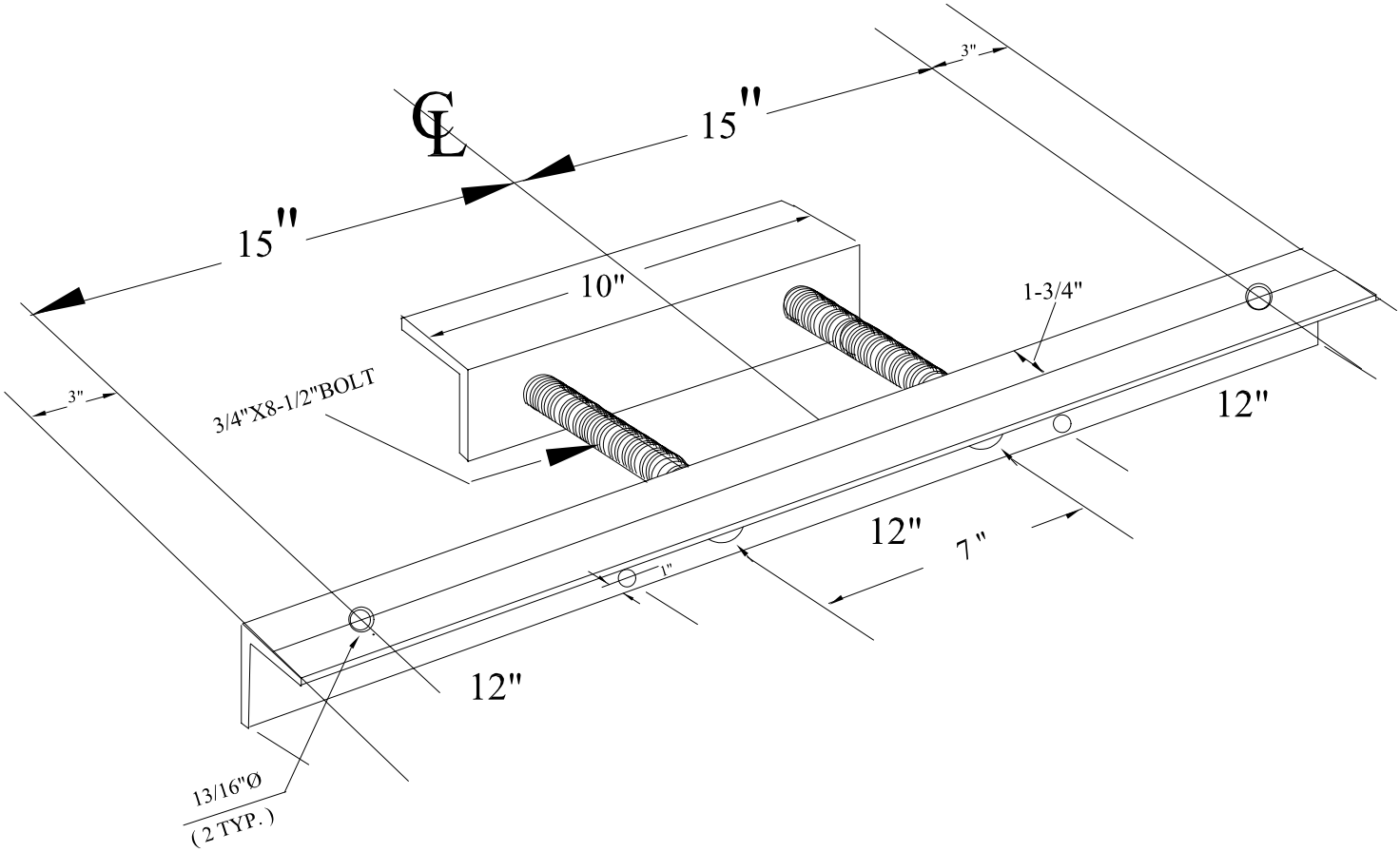

NOTES:

1.) ALL PARTS SHALL BE GALV. STEEL.
2.) MATERIAL SHALL BE 3 1/2"x3 1/2"x3/8" ANGLE.

DESCRIPTION:

TWO SPORTS LIGHT BRACKET

WEIGHT: 22 LBS

QTY:

FINISH: GALVANIZED STEEL